1. General Description

A: SPECIFICATION

1. NON-TURBO MODEL

Item			Specification	
Starter	Type		Reduction type	
	Vehicle model		MT	AT
	Model		M000T30471	M000T20171
	Manufacturer		Mitsubishi Electric	
	Voltage and output		12 V — 1.0 kW	12 V — 1.4 kW
	Direction of rotation		Counterclockwise (when observed from pinion)	
	Number of pinion teeth		8	9
	No-load characteristics	Voltage	11 V	
		Current	95 A or less	90 A or less
		Rotating speed	2,500 rpm or more	2,000 rpm or more
	Load characteristics	Voltage	7.5 V	7.7 V
		Current	300 A	400 A
		Torque	8.84 N·m (0.9 kgf-m, 6.5 ft-lb) or more	16.7 N·m (1.7 kgf-m, 12.3 ft-lb) or more
		Rotating speed	870 rpm or more	710 rpm or more
	Lock characteristics	Voltage	4 V	3.5 V
		Current	680 A or less	960 A or less
		Torque	17 N·m (1.73 kgf-m, 12.5 ft-lb) or more	31 N·m (3.16 kgf-m, 22.9 ft-lb) or more
Generator	Type		Rotating-field three-phase type, voltage regulator built-in type, with load response control system	
	Model		A2TG0391	
	Manufacturer		Mitsubishi Electric	
	Voltage and output		12 V — 90 A	
	Polarity on ground side		Negative	
	Direction of rotation		Clockwise (when observed from pulley side)	
	Armature connection		3-phase Y-type	
	Output current		1,500 rpm — 40 A or more 2,500 rpm — 74 A or more 5,000 rpm — 84 A or more	
	Regulated voltage		14.1 — 14.8 V [20°C (68°F)]	
Battery	Type and capacity		12 V — 48 AH (55D 23L)	12 V — 52 AH (75D 23L)

2. TURBO MODEL

Item			Specification	
Starter	Type		Reduction type	
	Vehicle model		MT	AT
	Model		228000 — 9270	M001T20171
	Manufacturer		DENSO	Mitsubishi Electric
	Voltage and output		12 V — 1.0 kW	12 V — 1.4 kW
	Direction of rotation		Counterclockwise (when observed from pinion)	
	Number of pinion teeth		9	
	No-load characteristics	Voltage	11 V	
		Current	90 A or less	
		Rotating speed	2,860 rpm or more	2,000 rpm or more
	Load characteristics	Voltage	8 V	7.7 V
		Current	280 A	400 A
		Torque	9.3 N·m (0.95 kgf-m, 6.9 ft-lb) or more	16.7 N·m (1.7 kgf-m, 12.3 ft-lb) or more
		Rotating speed	860 rpm or more	710 rpm or more
	Lock characteristics	Voltage	5 V	3.5 V
		Current	515 A or less	960 A or less
		Torque	16 N·m (1.63 kgf-m, 11.8 ft-lb) or more	31 N·m (3.16 kgf-m, 22.9 ft-lb) or more
Generator	Type		Rotating-field three-phase type, voltage regulator built-in type, with load response control system	
	Model		A3TG0491	
	Manufacturer		Mitsubishi Electric	
	Voltage and output		12 V — 110 A	
	Polarity on ground side		Negative	
	Direction of rotation		Clockwise (when observed from pulley side)	
	Armature connection		3-phase Y-type	
	Output current		1,500 rpm — 50 A or more 2,500 rpm — 91 A or more 5,000 rpm — 105 A or more	
	Regulated voltage		14.1 — 14.8 V [20°C (68°F)]	
Battery	Type and capacity		12 V — 48 AH (55D 23L)	12 V — 52 AH (75D 23L)

3. STI MODEL

Item			Specification
Starter	Type		Reduction type
	Vehicle model		MT
	Model		228000 — 9270
	Manufacturer		DENSO
	Voltage and output		12 V — 1.0 kW
	Direction of rotation		Counterclockwise (when observed from pinion)
	Number of pinion teeth		9
	No-load characteristics	Voltage	11 V
		Current	90 A or less
		Rotating speed	2,860 rpm or more
	Load characteristics	Voltage	8 V
		Current	280 A
		Torque	9.3 N·m (0.95 kgf-m, 6.9 ft-lb) or more
		Rotating speed	860 rpm or more
	Lock characteristics	Voltage	5 V
		Current	515 A or less
		Torque	16 N·m (1.63 kgf-m, 11.8 ft-lb) or more
Generator	Type		Rotating-field three-phase type, voltage regulator built-in type, with load response control system
	Model		A3TG0491
	Manufacturer		Mitsubishi Electric
	Voltage and output		12 V — 110 A
	Polarity on ground side		Negative
	Direction of rotation		Clockwise (when observed from pulley side)
	Armature connection		3-phase Y-type
	Output current		1,500 rpm — 50 A or more 2,500 rpm — 91 A or more 5,000 rpm — 105 A or more
	Regulated voltage		14.1 — 14.8 V [20°C (68°F)]
Battery	Type and capacity		12 V — 48 AH (55D 23L)

B: COMPONENT

1. STARTER

Except for turbo MT model and STI model

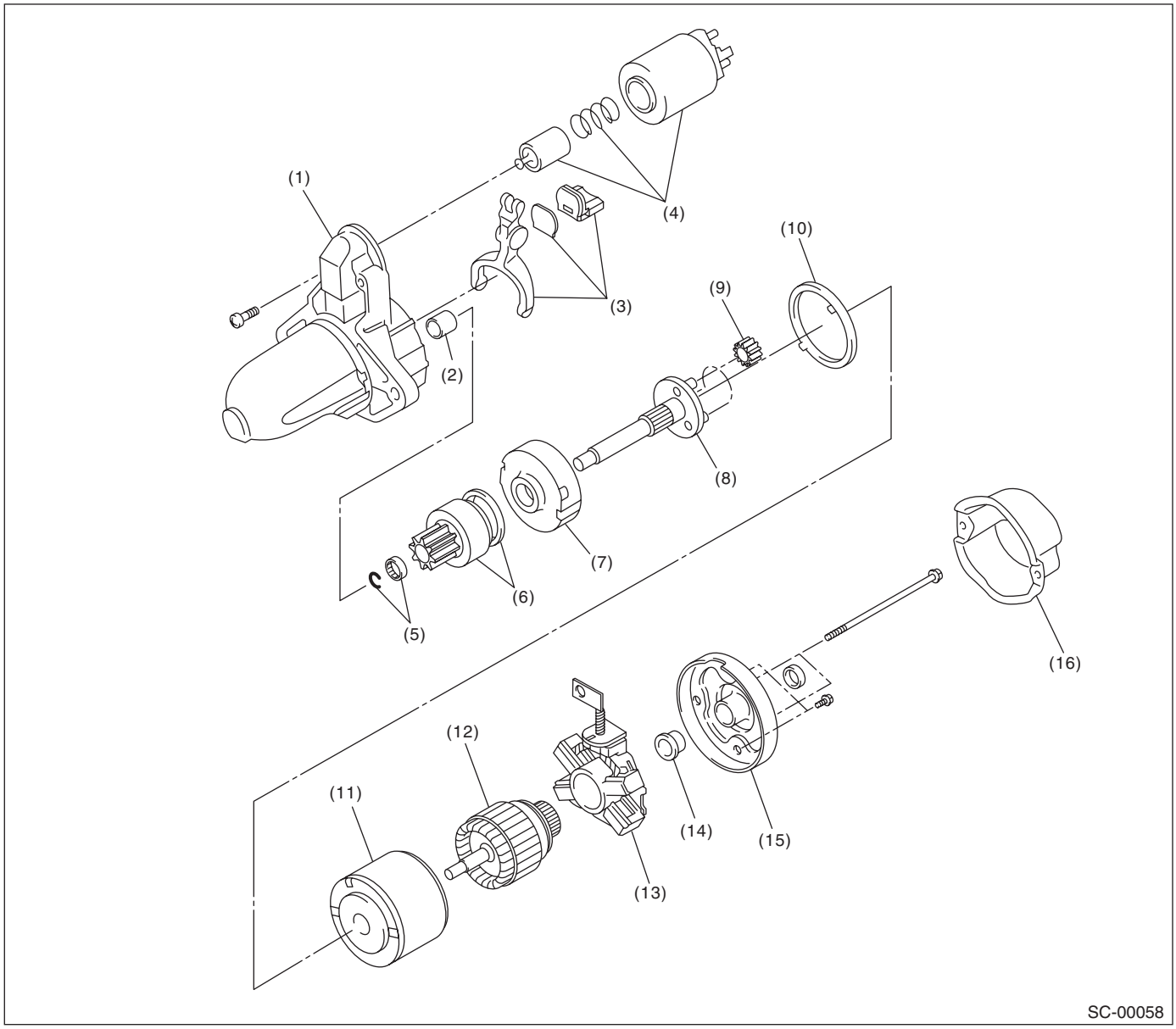

(1)	Front bracket	(7)	Internal gear ASSY	(13)	Brush holder ASSY
(2)	Sleeve bearing	(8)	Shaft ASSY	(14)	Sleeve bearing
(3)	Lever set	(9)	Gear ASSY	(15)	Rear cover
(4)	Magnet switch ASSY	(10)	Gasket	(16)	Rear cover set
(5)	Stopper set	(11)	Yoke ASSY		
(6)	Overrunning clutch	(12)	Armature		

Turbo MT model and STI model

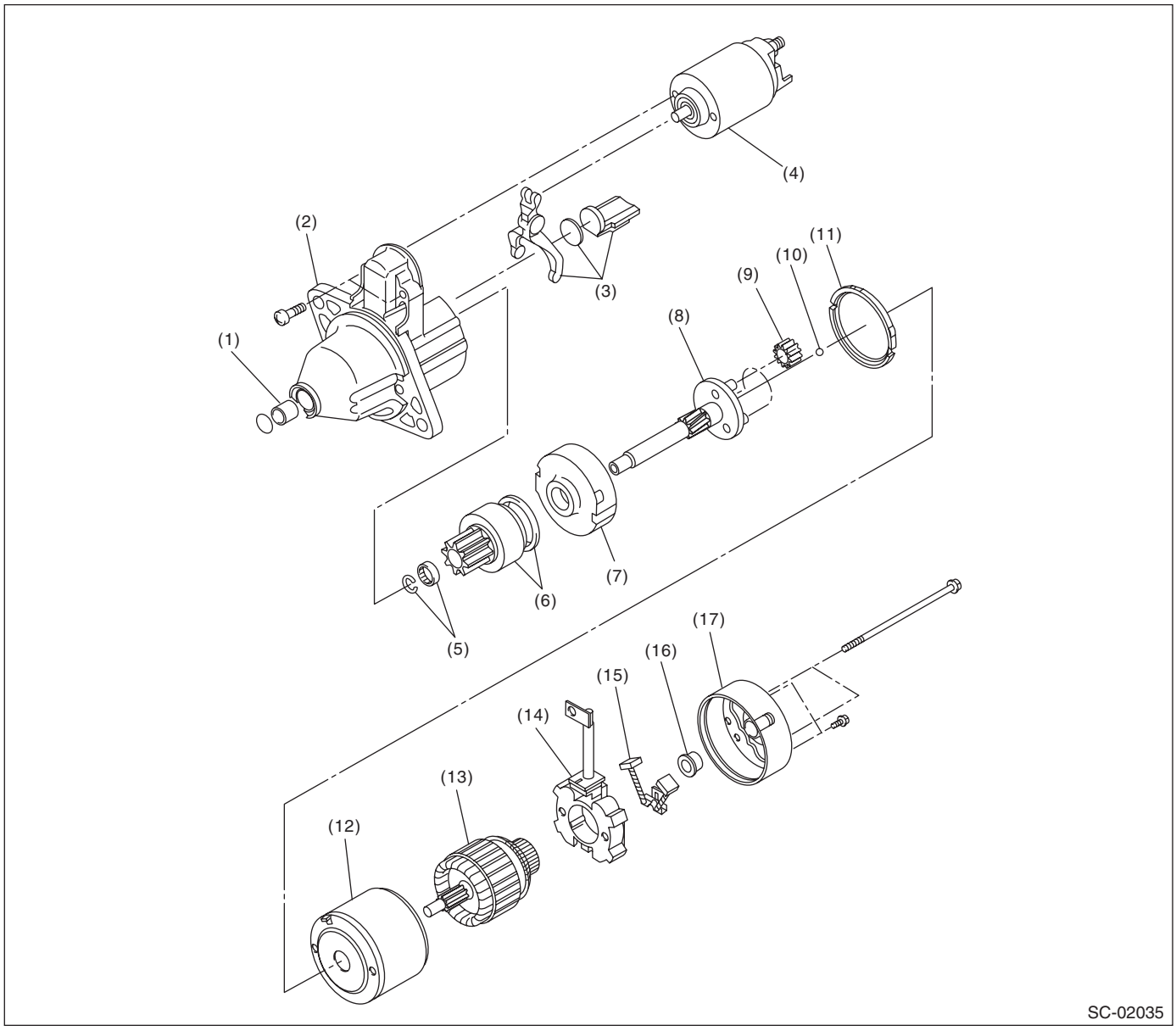

(1)	Sleeve bearing	(7)	Internal gear ASSY	(13)	Armature
(2)	Front bracket	(8)	Shaft ASSY	(14)	Brush holder ASSY
(3)	Lever set	(9)	Gear ASSY	(15)	Brush
(4)	Magnet switch ASSY	(10)	Ball	(16)	Sleeve bearing
(5)	Stopper set	(11)	Gasket	(17)	Rear bracket
(6)	Overrunning clutch	(12)	Yoke ASSY		

2. GENERATOR

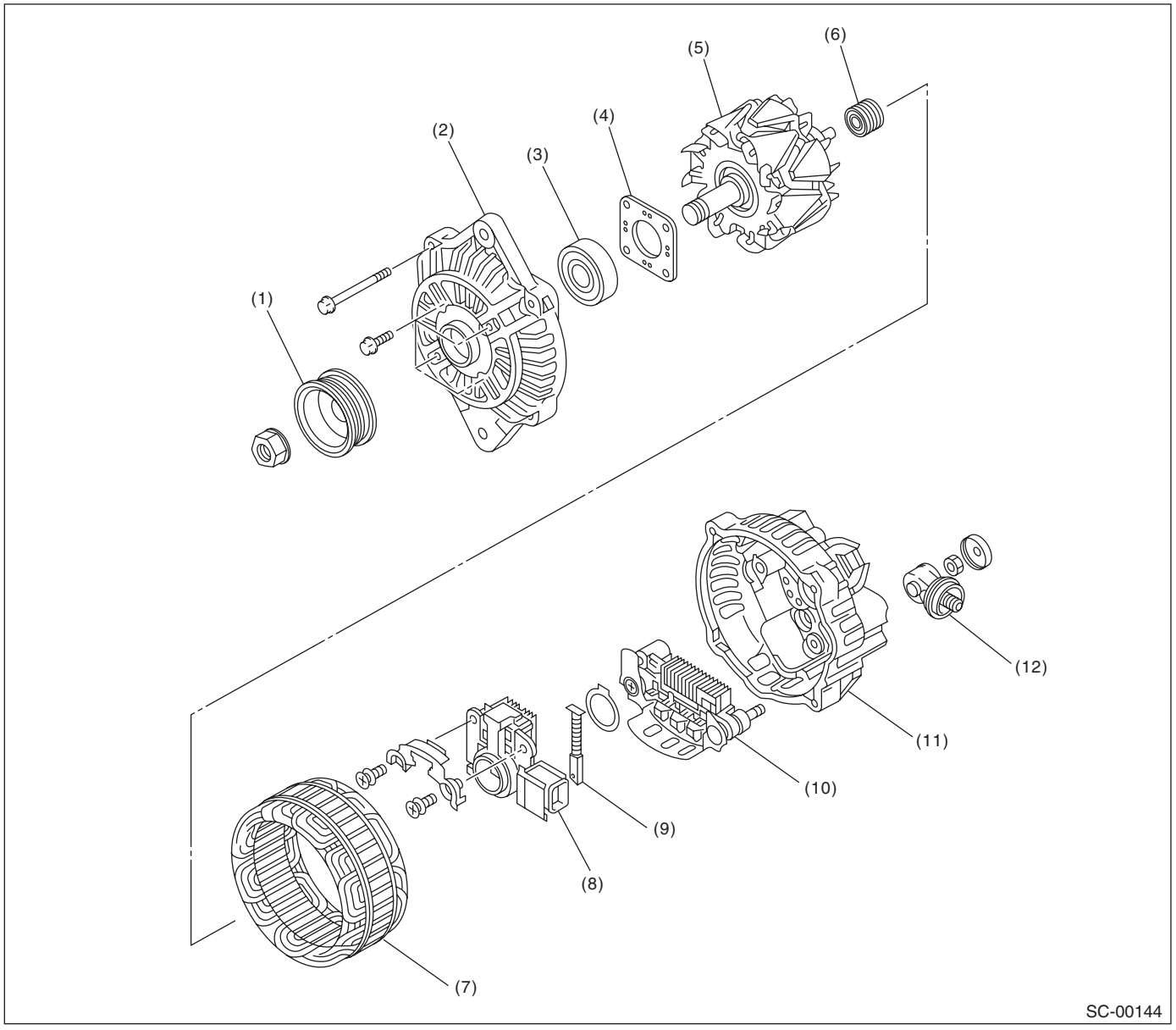

(1)	Pulley	(5)	Rotor	(9)	Brush
(2)	Front cover	(6)	Bearing	(10)	Rectifier
(3)	Ball bearing	(7)	Stator coil	(11)	Rear cover
(4)	Bearing retainer	(8)	IC regulator with brush	(12)	Terminal

C: CAUTION

- Wear appropriate work clothing, including a cap, protective goggles and protective shoes when performing any work.
- Remove contamination including dirt and corrosion before removal, installation or disassembly.
- Keep the disassembled parts in order and protect them from dust and dirt.
- Before removal, installation or disassembly, be sure to clarify the failure. Avoid unnecessary removal, installation, disassembly and replacement.
- Vehicle components are extremely hot after driving. Be wary of receiving burns from heated parts.
- Be sure to tighten fasteners including bolts and nuts to the specified torque.
- Place shop jacks or rigid racks at the specified points.
- Before disconnecting connectors of sensors or units, be sure to disconnect the ground cable from the battery.